M48

CRANE RAIL CLIPS

weldable & interlocking adjustment

inform rail
RAIL SOLUTIONS AUSTRALIA
sales@informrail.com.au | (07) 3339 3085

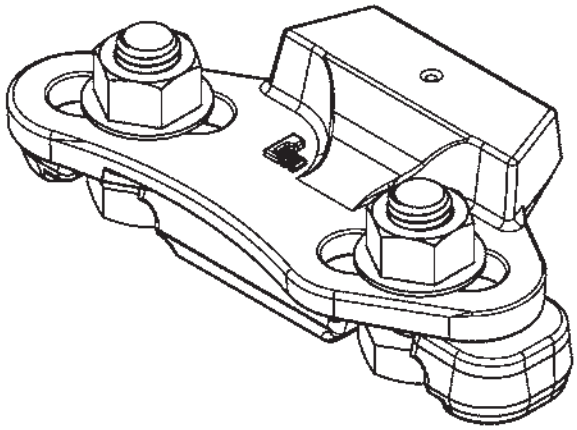

FEATURES

Patented system of the rubber pressure block installation prevents the escape of the pressure block from the rail clip during the life of the installation.

COMPONENTS INCLUDED

- upper rail clip
- rubber pressure block
- weldable base
- A325 heavy hex bolts
- bolt nuts

DIMENSIONS

M48 Rail Clip	**Height**	49mm
	Footprint	51mm*
	Length	180mm
	A	8mm

*with weld

SPECIFICATIONS

Lateral Resistance..... **215 kN**

Adjustment (A).....**16mm (+/- 8mm)**

INSTALLATION

Bolt Diameter..... **5/8”**

Tightening Torque..... **270Nm**

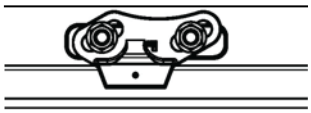

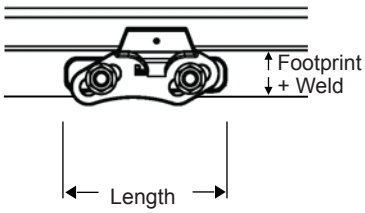

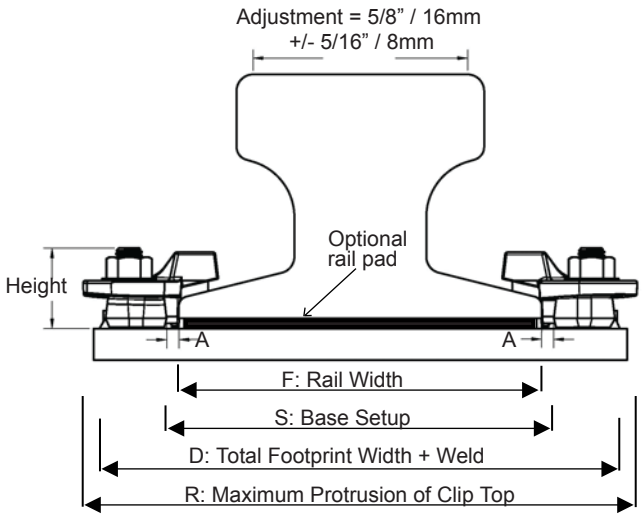

CALCULATIONS

Rail	**F:** rail width	**S:** F+(2 x 8mm)	**D:** F+(2 x 51mm)	**R:** F+(2 x 68.8)
Example: 68kg	152.4mm	160.4mm	262.4mm	290mm
Your rail:_____	___mm	___mm	___mm	___mm